- **Wide Operating Voltage Range of 2 V to 6 V**
- **Outputs Can Drive Up To 10 LSTTL Loads**
- **Low Power Consumption, 80-μA Max $I_{CC}$**
- **Typical $t_{pd}$ = 13 ns**
- **±4-mA Output Drive at 5 V**
- **Low Input Current of 1 μA Max**
- **Complementary Outputs**
- **Direct Overriding Load (Data) Inputs**
- **Gated Clock Inputs**
- **Parallel-to-Serial Data Conversion**

SN54HC165 . . . J OR W PACKAGE
SN74HC165 . . . D, DB, N, NS, OR PW PACKAGE
(TOP VIEW)

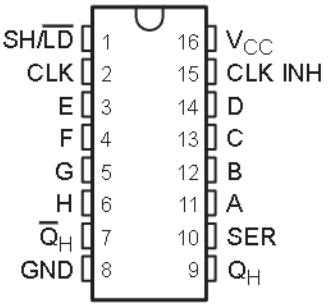


SN54HC165 . . . FK PACKAGE
(TOP VIEW)

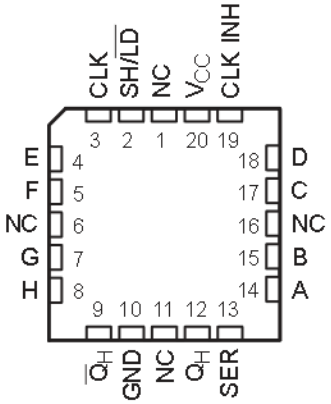


NC − No internal connection

## description/ordering information

The ’HC165 devices are 8-bit parallel-load shift registers that, when clocked, shift the data toward a serial ($Q_H$) output. Parallel-in access to each stage is provided by eight individual direct data (A−H) inputs that are enabled by a low level at the shift/load ($SH/\overline{LD}$) input. The ’HC165 devices also feature a clock-inhibit (CLK INH) function and a complementary serial ($\overline{Q}_H$) output.

**ORDERING INFORMATION**

| $T_A$ | PACKAGE† | | ORDERABLE PART NUMBER | TOP-SIDE MARKING |
|---|---|---|---|---|
| −40°C to 85°C | PDIP − N | Tube of 25 | SN74HC165N | SN74HC165N |
| | SOIC − D | Tube of 40 | SN74HC165D | HC165 |
| | | Reel of 2500 | SN74HC165DR | |
| | | Reel of 250 | SN74HC165DT | |
| | SOP − NS | Reel of 2000 | SN74HC165NSR | HC165 |
| | SSOP − DB | Reel of 2000 | SN74HC165DBR | HC165 |
| | TSSOP − PW | Tube of 90 | SN74HC165PW | HC165 |
| | | Reel of 2000 | SN74HC165PWR | |
| | | Reel of 250 | SN74HC165PWT | |
| −55°C to 125°C | CDIP − J | Tube of 25 | SNJ54HC165J | SNJ54HC165J |
| | CFP − W | Tube of 150 | SNJ54HC165W | SNJ54HC165W |
| | LCCC − FK | Tube of 55 | SNJ54HC165FK | SNJ54HC165FK |

† Package drawings, standard packing quantities, thermal data, symbolization, and PCB design guidelines are available at www.ti.com/sc/package.

Please be aware that an important notice concerning availability, standard warranty, and use in critical applications of Texas Instruments semiconductor products and disclaimers thereto appears at the end of this data sheet.

PRODUCTION DATA information is current as of publication date. Products conform to specifications per the terms of Texas Instruments standard warranty. Production processing does not necessarily include testing of all parameters.

Copyright © 2003, Texas Instruments Incorporated
On products compliant to MIL-PRF-38535, all parameters are tested unless otherwise noted. On all other products, production processing does not necessarily include testing of all parameters.

## description/ordering information (continued)

Clocking is accomplished by a low-to-high transition of the clock (CLK) input while SH/$\overline{LD}$ is held high and CLK INH is held low. The functions of CLK and CLK INH are interchangeable. Since a low CLK and a low-to-high transition of CLK INH also accomplish clocking, CLK INH should be changed to the high level only while CLK is high. Parallel loading is inhibited when SH/$\overline{LD}$ is held high. While SH/$\overline{LD}$ is low, the parallel inputs to the register are enabled independently of the levels of the CLK, CLK INH, or serial (SER) inputs.

FUNCTION TABLE

| INPUTS | | | FUNCTION |
|---|---|---|---|
| SH/$\overline{LD}$ | CLK | CLK INH | |
| L | X | X | Parallel load |
| H | H | X | No change |
| H | X | H | No change |
| H | L | ↑ | Shift† |
| H | ↑ | L | Shift† |

† Shift = content of each internal register shifts toward serial output $Q_H$. Data at SER is shifted into the first register.

## logic diagram (positive logic)

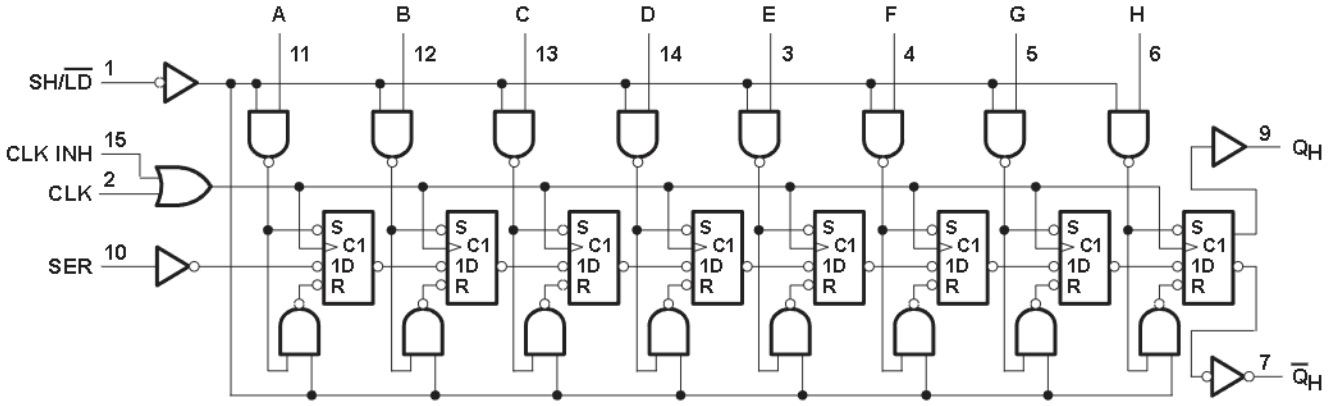


Pin numbers shown are for the D, DB, J, N, NS, PW, and W packages.

## typical shift, load, and inhibit sequence

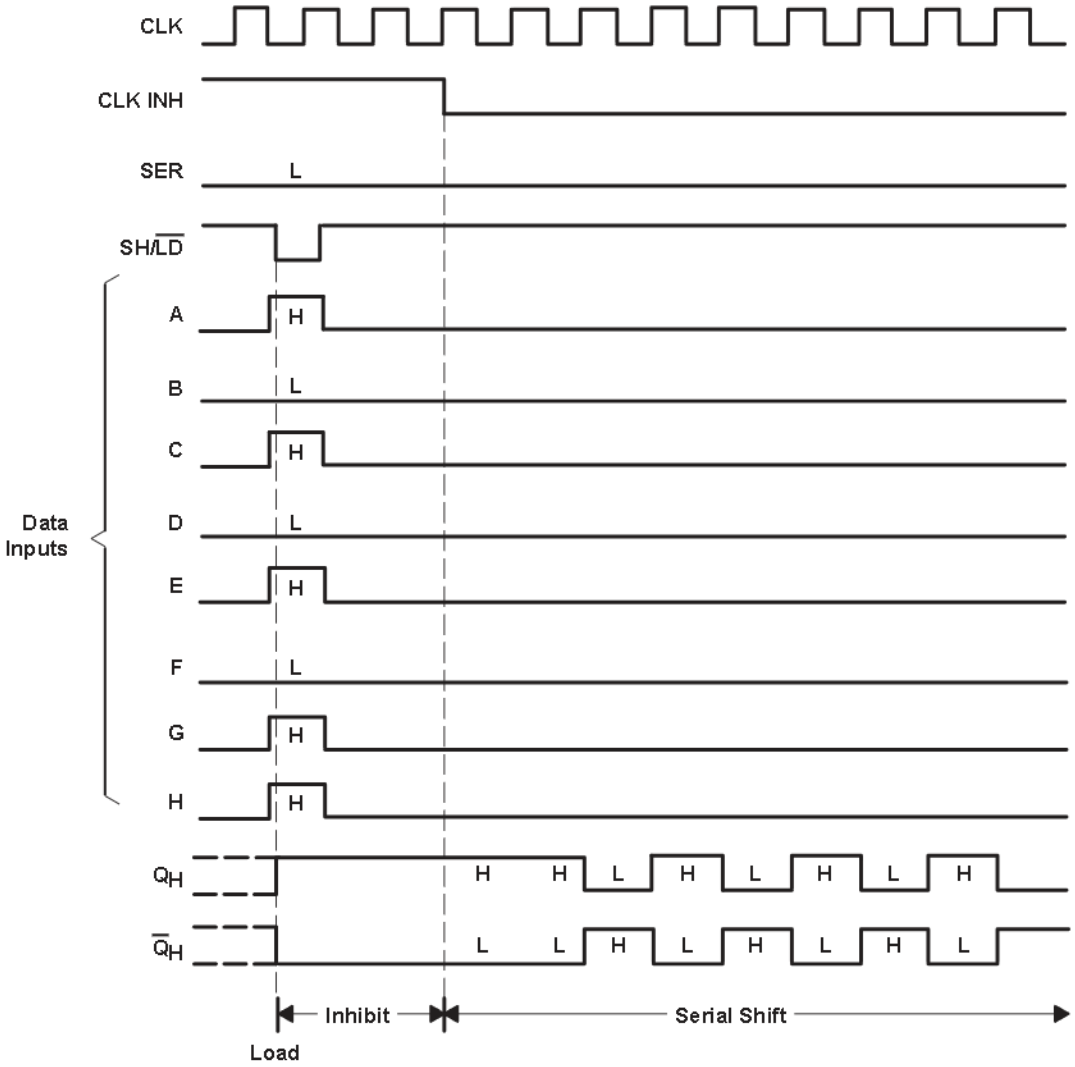

## absolute maximum ratings over operating free-air temperature range (unless otherwise noted)†

Supply voltage range, $V_{CC}$ . . . . . −0.5 V to 7 V
Input clamp current, $I_{IK}$ ($V_I < 0$ or $V_I > V_{CC}$) (see Note 1) . . . . . ±20 mA
Output clamp current, $I_{OK}$ ($V_O < 0$ or $V_O > V_{CC}$) (see Note 1) . . . . . ±20 mA
Continuous output current, $I_O$ ($V_O = 0$ to $V_{CC}$) . . . . . ±25 mA
Continuous current through $V_{CC}$ or GND . . . . . ±50 mA
Package thermal impedance, $\theta_{JA}$ (see Note 2): D package . . . . . 73°C/W
DB package . . . . . 82°C/W
N package . . . . . 67°C/W
NS package . . . . . 64°C/W
PW package . . . . . 108°C/W
Storage temperature range, $T_{stg}$ . . . . . −65°C to 150°C

† Stresses beyond those listed under "absolute maximum ratings" may cause permanent damage to the device. These are stress ratings only, and functional operation of the device at these or any other conditions beyond those indicated under "recommended operating conditions" is not implied. Exposure to absolute-maximum-rated conditions for extended periods may affect device reliability.

NOTES: 1. The input and output voltage ratings may be exceeded if the input and output current ratings are observed.
2. The package thermal impedance is calculated in accordance with JESD 51-7.

## recommended operating conditions (see Note 3)

| | | | SN54HC165 | | | SN74HC165 | | | UNIT |
|---|---|---|---|---|---|---|---|---|---|
| | | | MIN | NOM | MAX | MIN | NOM | MAX | |
| $V_{CC}$ | Supply voltage | | 2 | 5 | 6 | 2 | 5 | 6 | V |
| $V_{IH}$ | High-level input voltage | $V_{CC}$ = 2 V | 1.5 | | | 1.5 | | | V |
| | | $V_{CC}$ = 4.5 V | 3.15 | | | 3.15 | | | |
| | | $V_{CC}$ = 6 V | 4.2 | | | 4.2 | | | |
| $V_{IL}$ | Low-level input voltage | $V_{CC}$ = 2 V | | | 0.5 | | | 0.5 | V |
| | | $V_{CC}$ = 4.5 V | | | 1.35 | | | 1.35 | |
| | | $V_{CC}$ = 6 V | | | 1.8 | | | 1.8 | |
| $V_I$ | Input voltage | | 0 | | $V_{CC}$ | 0 | | $V_{CC}$ | V |
| $V_O$ | Output voltage | | 0 | | $V_{CC}$ | 0 | | $V_{CC}$ | V |
| $\Delta t/\Delta v$‡ | Input transition rise/fall time | $V_{CC}$ = 2 V | | | 1000 | | | 1000 | ns |
| | | $V_{CC}$ = 4.5 V | | | 500 | | | 500 | |
| | | $V_{CC}$ = 6 V | | | 400 | | | 400 | |
| $T_A$ | Operating free-air temperature | | −55 | | 125 | −40 | | 85 | °C |

NOTE 3: All unused inputs of the device must be held at $V_{CC}$ or GND to ensure proper device operation. Refer to the TI application report, *Implications of Slow or Floating CMOS Inputs*, literature number SCBA004.

‡ If this device is used in the threshold region (from $V_{IL}$max = 0.5 V to $V_{IH}$min = 1.5 V), there is a potential to go into the wrong state from induced grounding, causing double clocking. Operating with the inputs at $t_t$ = 1000 ns and $V_{CC}$ = 2 V does not damage the device; however, functionally, the CLK inputs are not ensured while in the shift, count, or toggle operating modes.

## electrical characteristics over recommended operating free-air temperature range (unless otherwise noted)

| PARAMETER | TEST CONDITIONS | | $V_{CC}$ | $T_A$ = 25°C | | | SN54HC165 | | SN74HC165 | | UNIT |
|---|---|---|---|---|---|---|---|---|---|---|---|
| | | | | MIN | TYP | MAX | MIN | MAX | MIN | MAX | |
| $V_{OH}$ | $V_I = V_{IH}$ or $V_{IL}$ | $I_{OH}$ = −20 µA | 2 V | 1.9 | 1.998 | | 1.9 | | 1.9 | | V |
| | | | 4.5 V | 4.4 | 4.499 | | 4.4 | | 4.4 | | |
| | | | 6 V | 5.9 | 5.999 | | 5.9 | | 5.9 | | |
| | | $I_{OH}$ = −4 mA | 4.5 V | 3.98 | 4.3 | | 3.7 | | 3.84 | | |
| | | $I_{OH}$ = −5.2 mA | 6 V | 5.48 | 5.8 | | 5.2 | | 5.34 | | |
| $V_{OL}$ | $V_I = V_{IH}$ or $V_{IL}$ | $I_{OL}$ = 20 µA | 2 V | | 0.002 | 0.1 | | 0.1 | | 0.1 | V |
| | | | 4.5 V | | 0.001 | 0.1 | | 0.1 | | 0.1 | |
| | | | 6 V | | 0.001 | 0.1 | | 0.1 | | 0.1 | |
| | | $I_{OL}$ = 4 mA | 4.5 V | | 0.17 | 0.26 | | 0.4 | | 0.33 | |
| | | $I_{OL}$ = 5.2 mA | 6 V | | 0.15 | 0.26 | | 0.4 | | 0.33 | |
| $I_I$ | $V_I = V_{CC}$ or 0 | | 6 V | | ±0.1 | ±100 | | ±1000 | | ±1000 | nA |
| $I_{CC}$ | $V_I = V_{CC}$ or 0, | $I_O$ = 0 | 6 V | | | 8 | | 160 | | 80 | µA |
| $C_i$ | | | 2 V to 6 V | | 3 | 10 | | 10 | | 10 | pF |

## timing requirements over recommended operating free-air temperature range (unless otherwise noted)

| | | | $V_{CC}$ | $T_A$ = 25°C | | SN54HC165 | | SN74HC165 | | UNIT |
|---|---|---|---|---|---|---|---|---|---|---|
| | | | | MIN | MAX | MIN | MAX | MIN | MAX | |
| $f_{clock}$ | Clock frequency | | 2 V | | 6 | | 4.2 | | 5 | MHz |
| | | | 4.5 V | | 31 | | 21 | | 25 | |
| | | | 6 V | | 36 | | 25 | | 29 | |
| $t_w$ | Pulse duration | SH/$\overline{LD}$ low | 2 V | 80 | | 120 | | 100 | | ns |
| | | | 4.5 V | 16 | | 24 | | 20 | | |
| | | | 6 V | 14 | | 20 | | 17 | | |
| | | CLK high or low | 2 V | 80 | | 120 | | 100 | | |
| | | | 4.5 V | 16 | | 24 | | 20 | | |
| | | | 6 V | 14 | | 20 | | 17 | | |
| $t_{su}$ | Setup time | SH/$\overline{LD}$ high before CLK↑ | 2 V | 80 | | 120 | | 100 | | ns |
| | | | 4.5 V | 16 | | 24 | | 20 | | |
| | | | 6 V | 14 | | 20 | | 17 | | |
| | | SER before CLK↑ | 2 V | 40 | | 60 | | 50 | | |
| | | | 4.5 V | 8 | | 12 | | 10 | | |
| | | | 6 V | 7 | | 10 | | 9 | | |
| | | CLK INH low before CLK↑ | 2 V | 100 | | 150 | | 125 | | |
| | | | 4.5 V | 20 | | 30 | | 25 | | |
| | | | 6 V | 17 | | 25 | | 21 | | |
| | | CLK INH high before CLK↑ | 2 V | 40 | | 60 | | 50 | | |
| | | | 4.5 V | 8 | | 12 | | 10 | | |
| | | | 6 V | 7 | | 10 | | 9 | | |
| | | Data before SH/$\overline{LD}$↓ | 2 V | 100 | | 150 | | 125 | | |
| | | | 4.5 V | 20 | | 30 | | 25 | | |
| | | | 6 V | 17 | | 26 | | 21 | | |
| $t_h$ | Hold time | SER data after CLK↑ | 2 V | 5 | | 5 | | 5 | | ns |
| | | | 4.5 V | 5 | | 5 | | 5 | | |
| | | | 6 V | 5 | | 5 | | 5 | | |
| | | PAR data after SH/$\overline{LD}$↓ | 2 V | 5 | | 5 | | 5 | | |
| | | | 4.5 V | 5 | | 5 | | 5 | | |
| | | | 6 V | 5 | | 5 | | 5 | | |

## switching characteristics over recommended operating free-air temperature range, $C_L$ = 50 pF (unless otherwise noted) (see Figure 1)

| PARAMETER | FROM (INPUT) | TO (OUTPUT) | $V_{CC}$ | $T_A$ = 25°C | | | SN54HC165 | | SN74HC165 | | UNIT |
|---|---|---|---|---|---|---|---|---|---|---|---|
| | | | | MIN | TYP | MAX | MIN | MAX | MIN | MAX | |
| $f_{max}$ | | | 2 V | 6 | 13 | | 4.2 | | 5 | | MHz |
| | | | 4.5 V | 31 | 50 | | 21 | | 25 | | |
| | | | 6 V | 36 | 62 | | 25 | | 29 | | |
| $t_{pd}$ | SH/$\overline{LD}$ | $Q_H$ or $\overline{Q}_H$ | 2 V | | 80 | 150 | | 225 | | 190 | ns |
| | | | 4.5 V | | 20 | 30 | | 45 | | 38 | |
| | | | 6 V | | 16 | 26 | | 38 | | 32 | |
| | CLK | $Q_H$ or $\overline{Q}_H$ | 2 V | | 75 | 150 | | 225 | | 190 | |
| | | | 4.5 V | | 15 | 30 | | 45 | | 38 | |
| | | | 6 V | | 13 | 26 | | 38 | | 32 | |
| | H | $Q_H$ or $\overline{Q}_H$ | 2 V | | 75 | 150 | | 225 | | 190 | |
| | | | 4.5 V | | 15 | 30 | | 45 | | 38 | |
| | | | 6 V | | 13 | 26 | | 38 | | 32 | |
| $t_t$ | | Any | 2 V | | 38 | 75 | | 110 | | 95 | ns |
| | | | 4.5 V | | 8 | 15 | | 22 | | 19 | |
| | | | 6 V | | 6 | 13 | | 19 | | 16 | |

## operating characteristics, $T_A$ = 25°C

| PARAMETER | | TEST CONDITIONS | TYP | UNIT |
|---|---|---|---|---|
| $C_{pd}$ | Power dissipation capacitance | No load | 75 | pF |

## PARAMETER MEASUREMENT INFORMATION

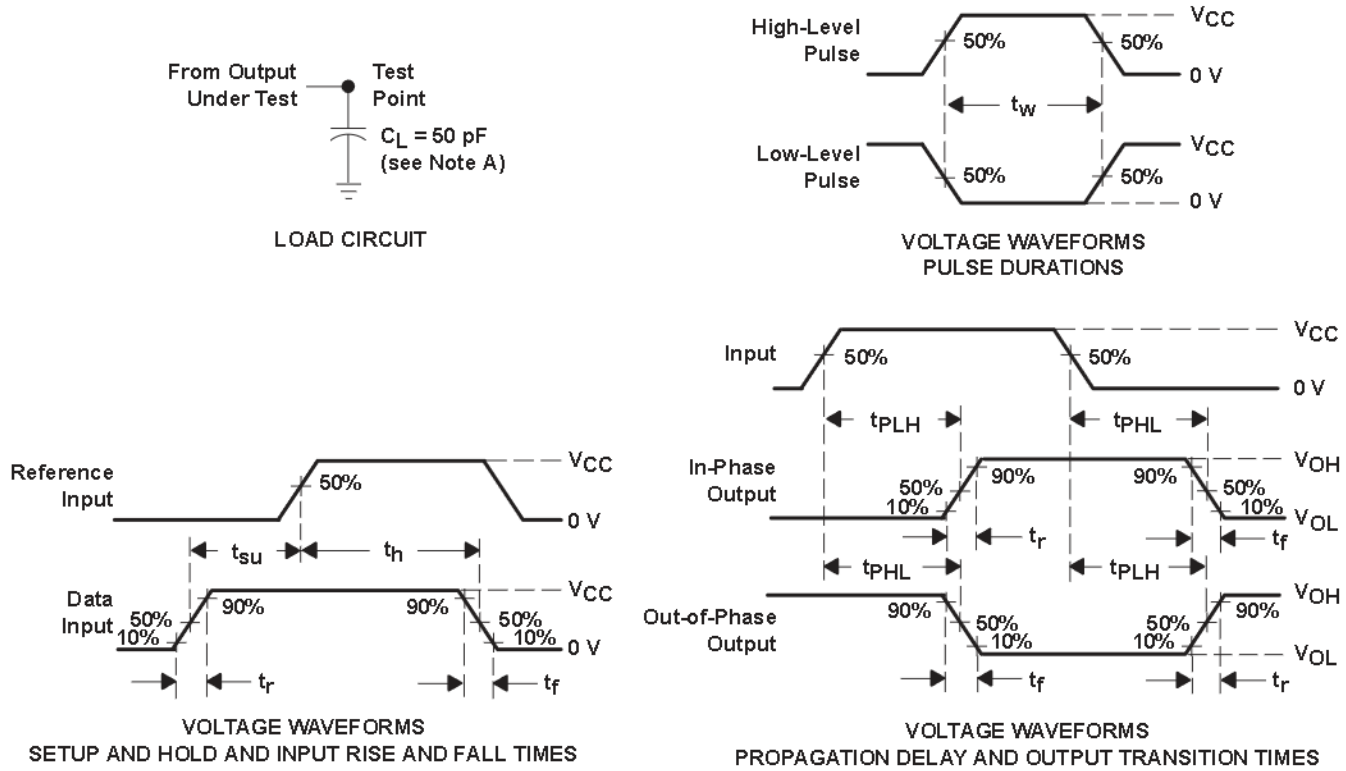


NOTES: A. $C_L$ includes probe and test-fixture capacitance.
B. Phase relationships between waveforms were chosen arbitrarily. All input pulses are supplied by generators having the following characteristics: PRR ≤ 1 MHz, $Z_O$ = 50 Ω, $t_r$ = 6 ns, $t_f$ = 6 ns.
C. For clock inputs, $f_{max}$ is measured when the input duty cycle is 50%.
D. The outputs are measured one at a time with one input transition per measurement.
E. $t_{PLH}$ and $t_{PHL}$ are the same as $t_{pd}$.

**Figure 1. Load Circuit and Voltage Waveforms**

## PACKAGING INFORMATION

| Orderable Device | Status (1) | Package Type | Package Drawing | Pins | Package Qty | Eco Plan (2) | Lead/Ball Finish | MSL Peak Temp (3) |
|---|---|---|---|---|---|---|---|---|
| 84095012A | ACTIVE | LCCC | FK | 20 | 1 | TBD | Call TI | Level-NC-NC-NC |
| 8409501EA | ACTIVE | CDIP | J | 16 | 1 | TBD | Call TI | Level-NC-NC-NC |
| 8409501FA | ACTIVE | CFP | W | 16 | 1 | TBD | Call TI | Level-NC-NC-NC |
| SN54HC165J | ACTIVE | CDIP | J | 16 | 1 | TBD | Call TI | Level-NC-NC-NC |
| SN74HC165D | ACTIVE | SOIC | D | 16 | 40 | Green (RoHS & no Sb/Br) | CU NIPDAU | Level-1-260C-UNLIM |
| SN74HC165DBR | ACTIVE | SSOP | DB | 16 | 2000 | Green (RoHS & no Sb/Br) | CU NIPDAU | Level-1-260C-UNLIM |
| SN74HC165DBRE4 | ACTIVE | SSOP | DB | 16 | 2000 | Green (RoHS & no Sb/Br) | CU NIPDAU | Level-1-260C-UNLIM |
| SN74HC165DE4 | ACTIVE | SOIC | D | 16 | 40 | Green (RoHS & no Sb/Br) | CU NIPDAU | Level-1-260C-UNLIM |
| SN74HC165DR | ACTIVE | SOIC | D | 16 | 2500 | Green (RoHS & no Sb/Br) | CU NIPDAU | Level-1-260C-UNLIM |
| SN74HC165DRE4 | ACTIVE | SOIC | D | 16 | 2500 | Green (RoHS & no Sb/Br) | CU NIPDAU | Level-1-260C-UNLIM |
| SN74HC165DT | ACTIVE | SOIC | D | 16 | 250 | Green (RoHS & no Sb/Br) | CU NIPDAU | Level-1-260C-UNLIM |
| SN74HC165DTE4 | ACTIVE | SOIC | D | 16 | 250 | Green (RoHS & no Sb/Br) | CU NIPDAU | Level-1-260C-UNLIM |
| SN74HC165N | ACTIVE | PDIP | N | 16 | 25 | Pb-Free (RoHS) | CU NIPDAU | Level-NC-NC-NC |
| SN74HC165N3 | OBSOLETE | PDIP | N | 16 | | TBD | Call TI | Call TI |
| SN74HC165NE4 | ACTIVE | PDIP | N | 16 | 25 | Pb-Free (RoHS) | CU NIPDAU | Level-NC-NC-NC |
| SN74HC165NSR | ACTIVE | SO | NS | 16 | 2000 | Green (RoHS & no Sb/Br) | CU NIPDAU | Level-1-260C-UNLIM |
| SN74HC165NSRE4 | ACTIVE | SO | NS | 16 | 2000 | Green (RoHS & no Sb/Br) | CU NIPDAU | Level-1-260C-UNLIM |
| SN74HC165PW | ACTIVE | TSSOP | PW | 16 | 90 | Green (RoHS & no Sb/Br) | CU NIPDAU | Level-1-260C-UNLIM |
| SN74HC165PWG4 | ACTIVE | TSSOP | PW | 16 | 90 | Green (RoHS & no Sb/Br) | CU NIPDAU | Level-1-260C-UNLIM |
| SN74HC165PWLE | OBSOLETE | TSSOP | PW | 16 | | TBD | Call TI | Call TI |
| SN74HC165PWR | ACTIVE | TSSOP | PW | 16 | 2000 | Green (RoHS & no Sb/Br) | CU NIPDAU | Level-1-260C-UNLIM |
| SN74HC165PWRG4 | ACTIVE | TSSOP | PW | 16 | 2000 | Green (RoHS & no Sb/Br) | CU NIPDAU | Level-1-260C-UNLIM |
| SN74HC165PWT | ACTIVE | TSSOP | PW | 16 | 250 | Green (RoHS & no Sb/Br) | CU NIPDAU | Level-1-260C-UNLIM |
| SN74HC165PWTE4 | ACTIVE | TSSOP | PW | 16 | 250 | Green (RoHS & no Sb/Br) | CU NIPDAU | Level-1-260C-UNLIM |
| SNJ54HC165FK | ACTIVE | LCCC | FK | 20 | 1 | TBD | Call TI | Level-NC-NC-NC |
| SNJ54HC165J | ACTIVE | CDIP | J | 16 | 1 | TBD | Call TI | Level-NC-NC-NC |
| SNJ54HC165W | ACTIVE | CFP | W | 16 | 1 | TBD | Call TI | Level-NC-NC-NC |

(1) The marketing status values are defined as follows:
**ACTIVE:** Product device recommended for new designs.

**LIFEBUY:** TI has announced that the device will be discontinued, and a lifetime-buy period is in effect.
**NRND:** Not recommended for new designs. Device is in production to support existing customers, but TI does not recommend using this part in a new design.
**PREVIEW:** Device has been announced but is not in production. Samples may or may not be available.
**OBSOLETE:** TI has discontinued the production of the device.

(2) Eco Plan - The planned eco-friendly classification: Pb-Free (RoHS) or Green (RoHS & no Sb/Br) - please check http://www.ti.com/productcontent for the latest availability information and additional product content details.
**TBD:** The Pb-Free/Green conversion plan has not been defined.
**Pb-Free (RoHS):** TI's terms "Lead-Free" or "Pb-Free" mean semiconductor products that are compatible with the current RoHS requirements for all 6 substances, including the requirement that lead not exceed 0.1% by weight in homogeneous materials. Where designed to be soldered at high temperatures, TI Pb-Free products are suitable for use in specified lead-free processes.
**Green (RoHS & no Sb/Br):** TI defines "Green" to mean Pb-Free (RoHS compatible), and free of Bromine (Br) and Antimony (Sb) based flame retardants (Br or Sb do not exceed 0.1% by weight in homogeneous material)

(3) MSL, Peak Temp. -- The Moisture Sensitivity Level rating according to the JEDEC industry standard classifications, and peak solder temperature.

**Important Information and Disclaimer:**The information provided on this page represents TI's knowledge and belief as of the date that it is provided. TI bases its knowledge and belief on information provided by third parties, and makes no representation or warranty as to the accuracy of such information. Efforts are underway to better integrate information from third parties. TI has taken and continues to take reasonable steps to provide representative and accurate information but may not have conducted destructive testing or chemical analysis on incoming materials and chemicals. TI and TI suppliers consider certain information to be proprietary, and thus CAS numbers and other limited information may not be available for release.

In no event shall TI's liability arising out of such information exceed the total purchase price of the TI part(s) at issue in this document sold by TI to Customer on an annual basis.

J (R–GDIP–T**) CERAMIC DUAL IN–LINE PACKAGE

14 LEADS SHOWN

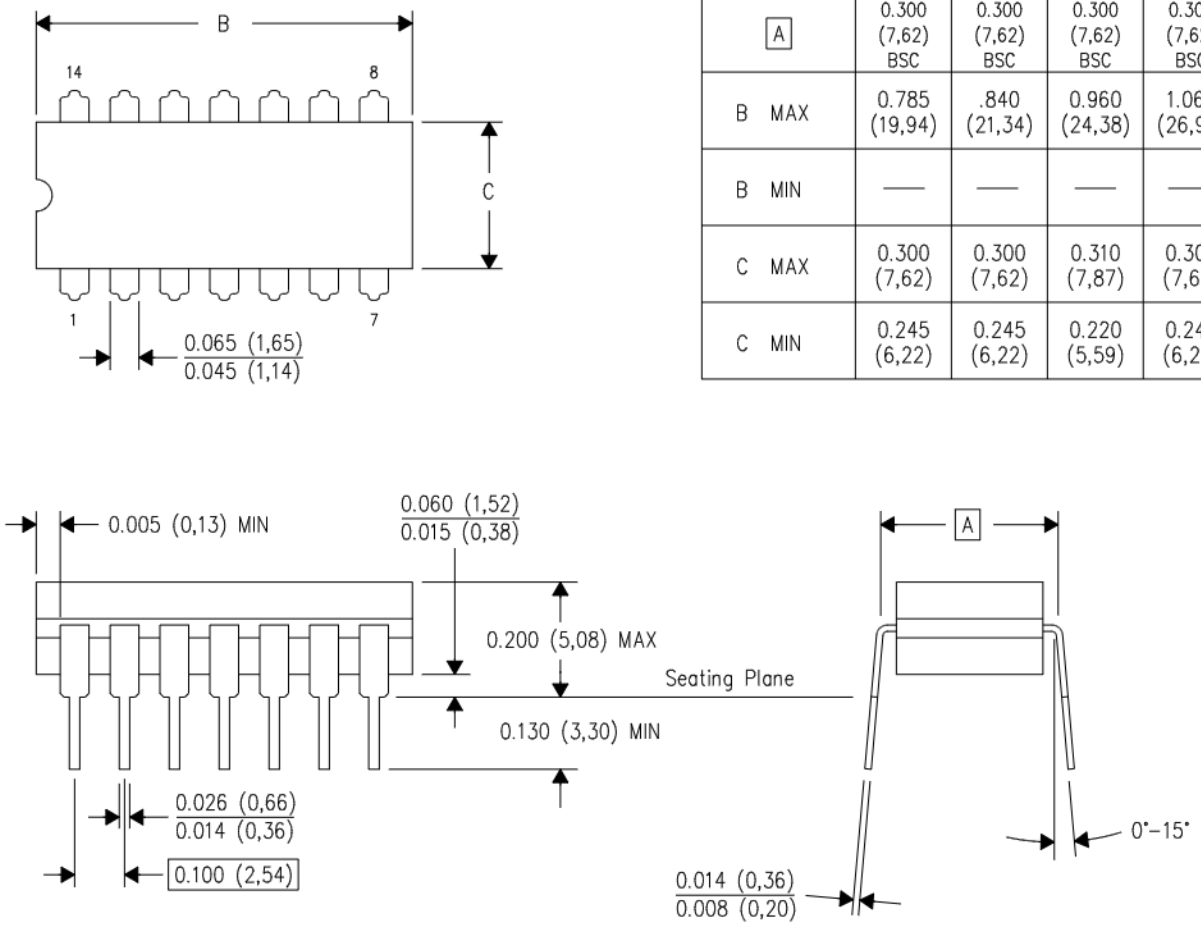


| DIM \ PINS ** | 14 | 16 | 18 | 20 |
|---|---|---|---|---|
| A | 0.300 (7,62) BSC | 0.300 (7,62) BSC | 0.300 (7,62) BSC | 0.300 (7,62) BSC |
| B MAX | 0.785 (19,94) | .840 (21,34) | 0.960 (24,38) | 1.060 (26,92) |
| B MIN | — | — | — | — |
| C MAX | 0.300 (7,62) | 0.300 (7,62) | 0.310 (7,87) | 0.300 (7,62) |
| C MIN | 0.245 (6,22) | 0.245 (6,22) | 0.220 (5,59) | 0.245 (6,22) |

4040083/F 03/03

NOTES:
- A. All linear dimensions are in inches (millimeters).
- B. This drawing is subject to change without notice.
- C. This package is hermetically sealed with a ceramic lid using glass frit.
- D. Index point is provided on cap for terminal identification only on press ceramic glass frit seal only.
- E. Falls within MIL STD 1835 GDIP1–T14, GDIP1–T16, GDIP1–T18 and GDIP1–T20.

## W (R–GDFP–F16) CERAMIC DUAL FLATPACK

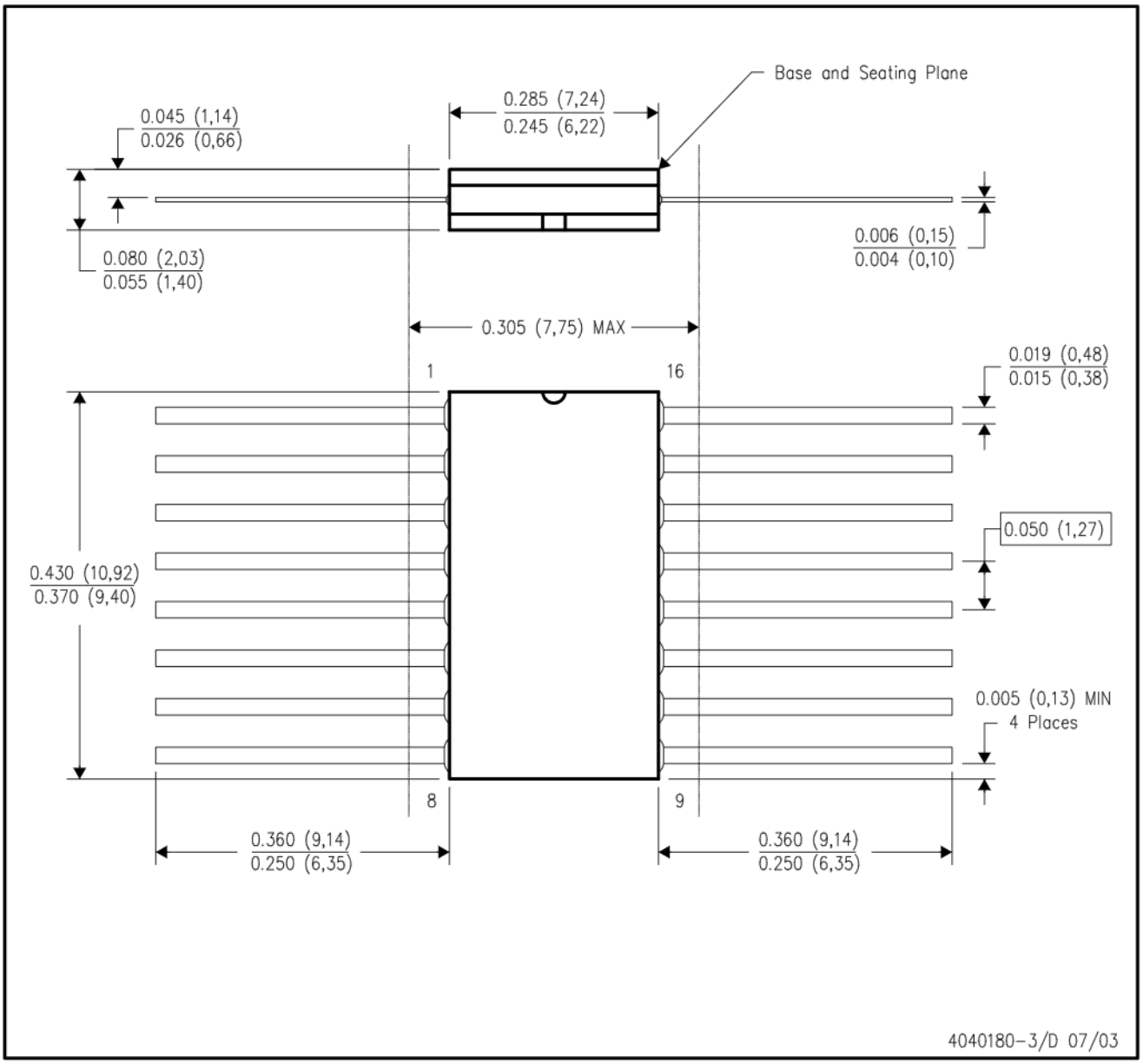


NOTES:
A. All linear dimensions are in inches (millimeters).
B. This drawing is subject to change without notice.
C. This package can be hermetically sealed with a ceramic lid using glass frit.
D. Index point is provided on cap for terminal identification only.
E. Falls within MIL STD 1835 GDFP1–F16 and JEDEC MO–092AC

**FK (S-CQCC-N**)** **LEADLESS CERAMIC CHIP CARRIER**

28 TERMINAL SHOWN

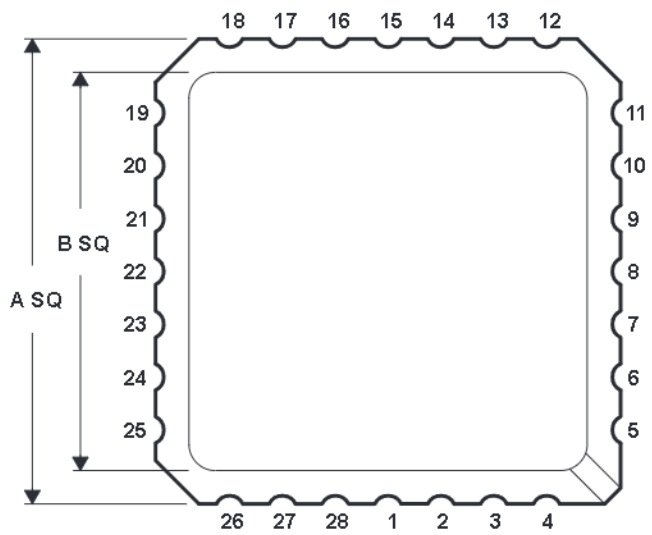


| NO. OF TERMINALS ** | A | | B | |
|---|---|---|---|---|
| | MIN | MAX | MIN | MAX |
| 20 | 0.342 (8,69) | 0.358 (9,09) | 0.307 (7,80) | 0.358 (9,09) |
| 28 | 0.442 (11,23) | 0.458 (11,63) | 0.406 (10,31) | 0.458 (11,63) |
| 44 | 0.640 (16,26) | 0.660 (16,76) | 0.495 (12,58) | 0.560 (14,22) |
| 52 | 0.739 (18,78) | 0.761 (19,32) | 0.495 (12,58) | 0.560 (14,22) |
| 68 | 0.938 (23,83) | 0.962 (24,43) | 0.850 (21,6) | 0.858 (21,8) |
| 84 | 1.141 (28,99) | 1.165 (29,59) | 1.047 (26,6) | 1.063 (27,0) |

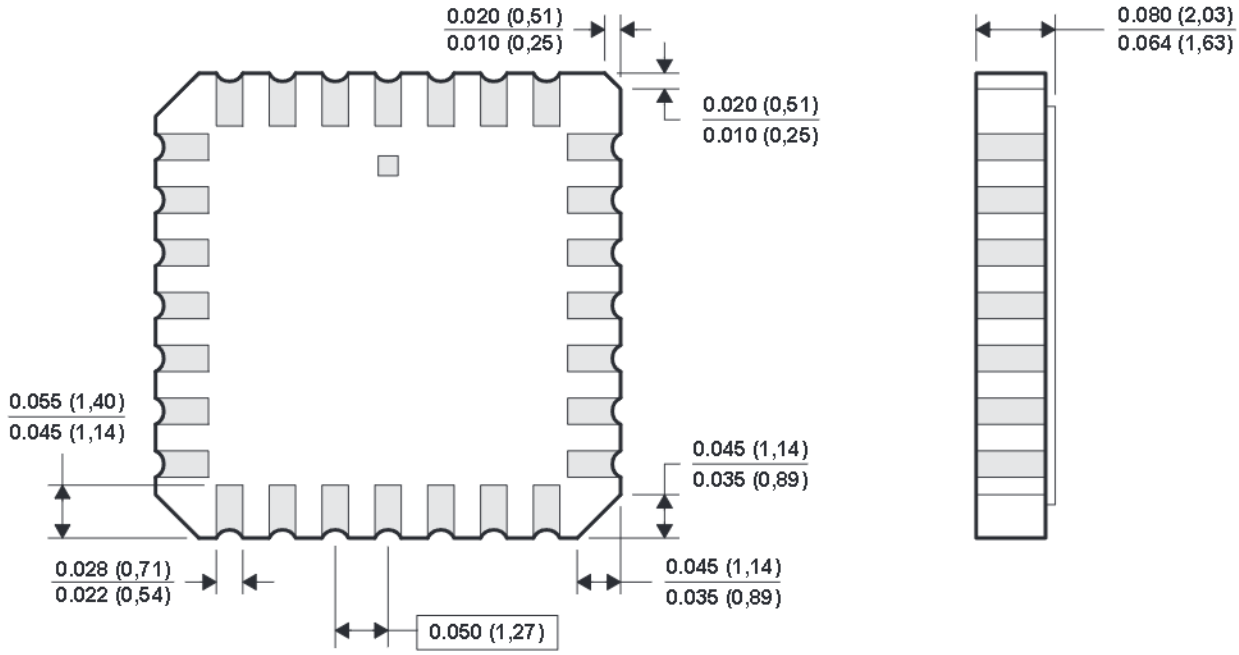


4040140/D 10/96

NOTES: A. All linear dimensions are in inches (millimeters).
B. This drawing is subject to change without notice.
C. This package can be hermetically sealed with a metal lid.
D. The terminals are gold plated.
E. Falls within JEDEC MS-004

## N (R–PDIP–T**) PLASTIC DUAL–IN–LINE PACKAGE

16 PINS SHOWN

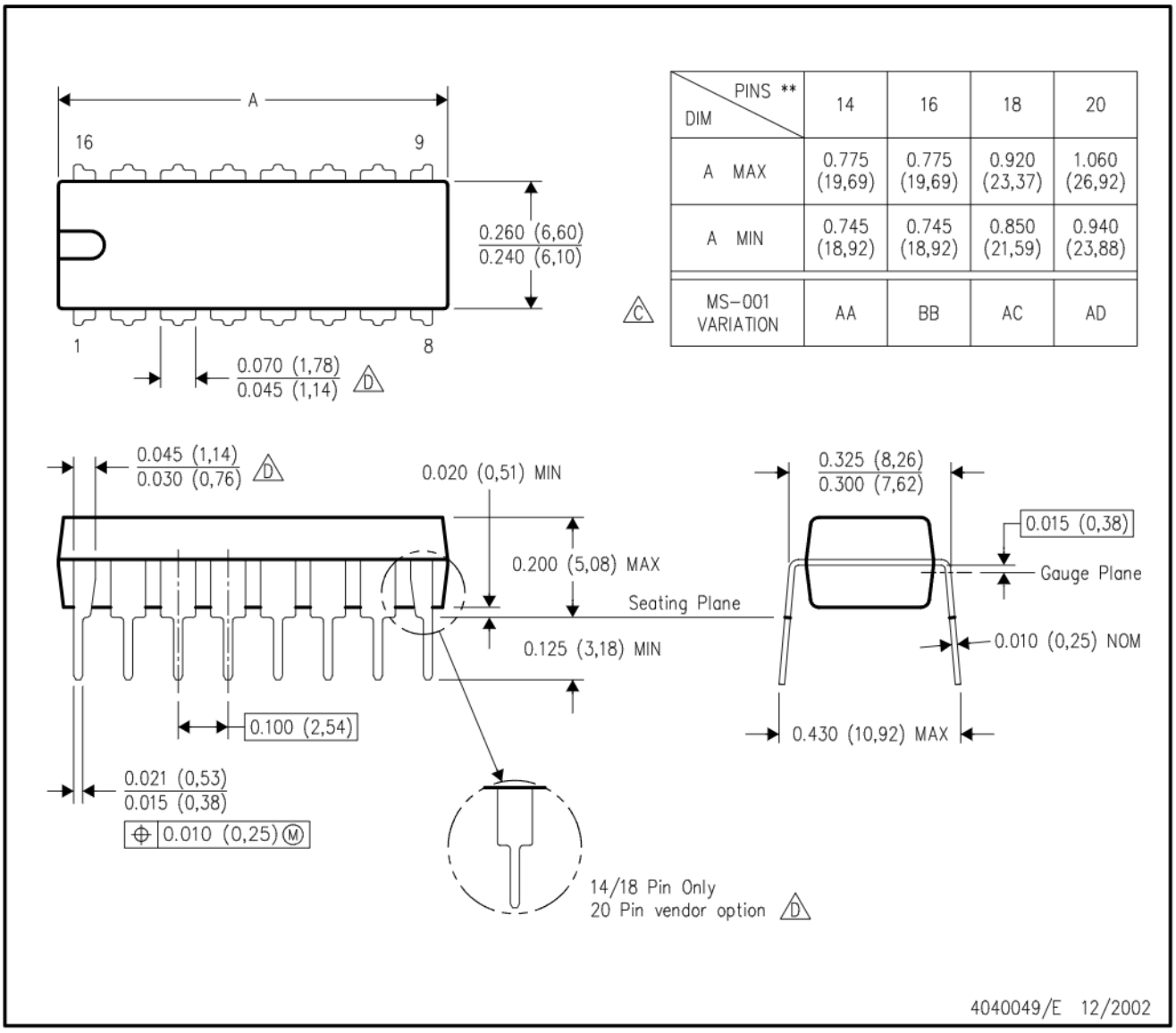


| DIM \ PINS ** | 14 | 16 | 18 | 20 |
|---|---|---|---|---|
| A MAX | 0.775 (19,69) | 0.775 (19,69) | 0.920 (23,37) | 1.060 (26,92) |
| A MIN | 0.745 (18,92) | 0.745 (18,92) | 0.850 (21,59) | 0.940 (23,88) |
| MS–001 VARIATION (C) | AA | BB | AC | AD |

NOTES:
- A. All linear dimensions are in inches (millimeters).
- B. This drawing is subject to change without notice.
- C. Falls within JEDEC MS–001, except 18 and 20 pin minimum body length (Dim A).
- D. The 20 pin end lead shoulder width is a vendor option, either half or full width.

D (R–PDSO–G16) PLASTIC SMALL–OUTLINE PACKAGE

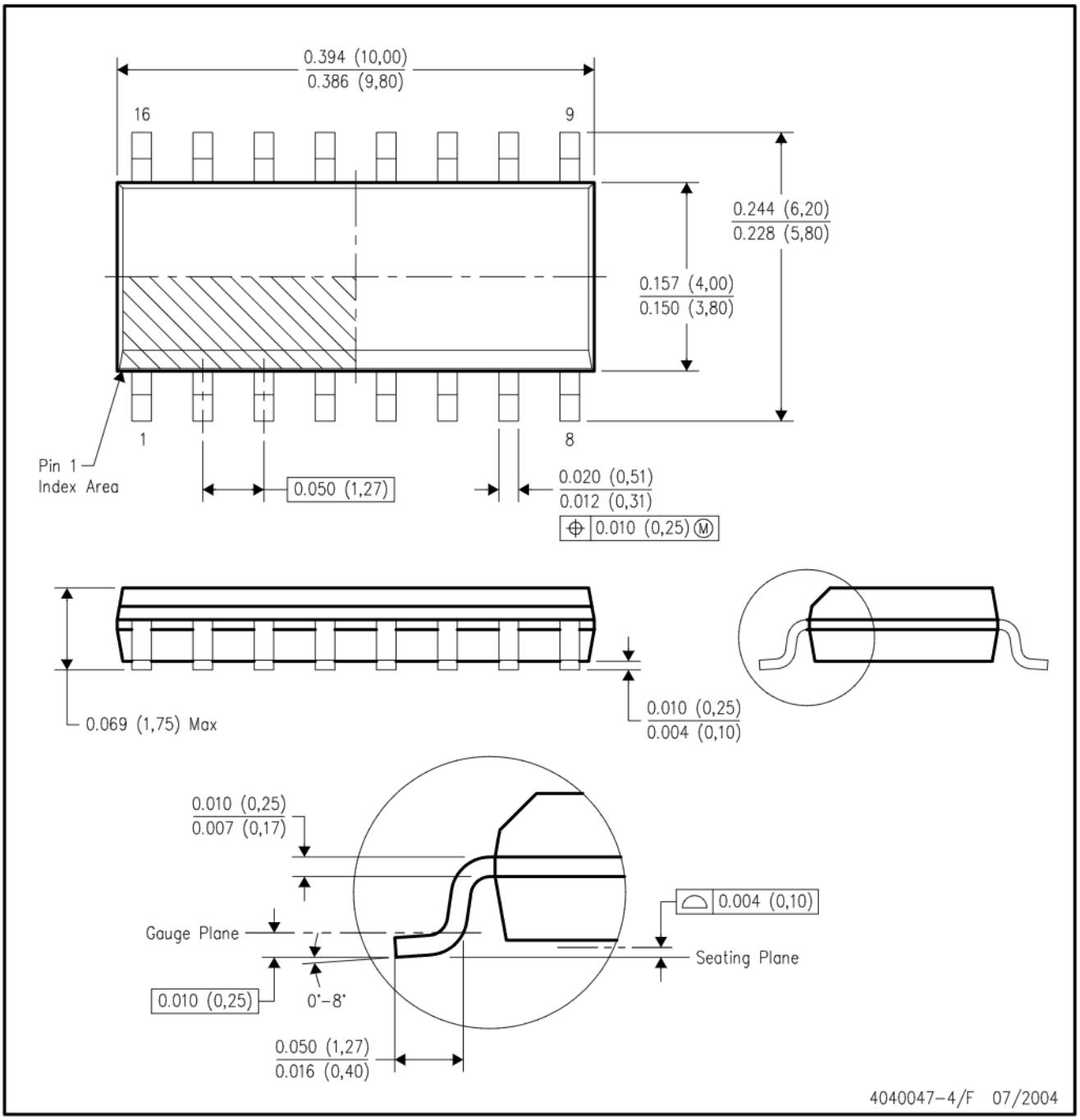


NOTES:
A. All linear dimensions are in inches (millimeters).
B. This drawing is subject to change without notice.
C. Body dimensions do not include mold flash or protrusion not to exceed 0.006 (0,15).
D. Falls within JEDEC MS–012 variation AC.

## MECHANICAL DATA

**NS (R-PDSO-G**)** **PLASTIC SMALL-OUTLINE PACKAGE**

**14-PINS SHOWN**

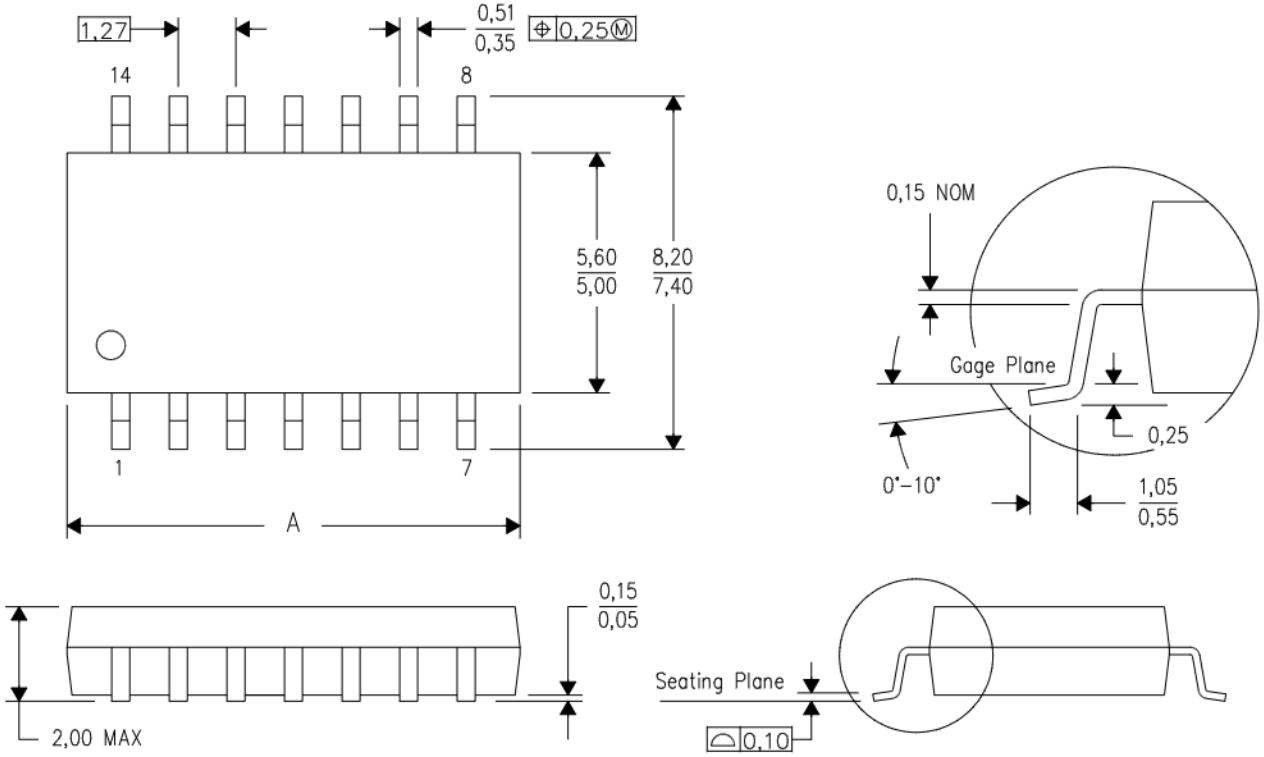


| DIM \ PINS ** | 14 | 16 | 20 | 24 |
|---|---|---|---|---|
| A MAX | 10,50 | 10,50 | 12,90 | 15,30 |
| A MIN | 9,90 | 9,90 | 12,30 | 14,70 |

4040062/C 03/03

NOTES:
A. All linear dimensions are in millimeters.
B. This drawing is subject to change without notice.
C. Body dimensions do not include mold flash or protrusion, not to exceed 0,15.

**DB (R-PDSO-G**)** **PLASTIC SMALL-OUTLINE**

28 PINS SHOWN

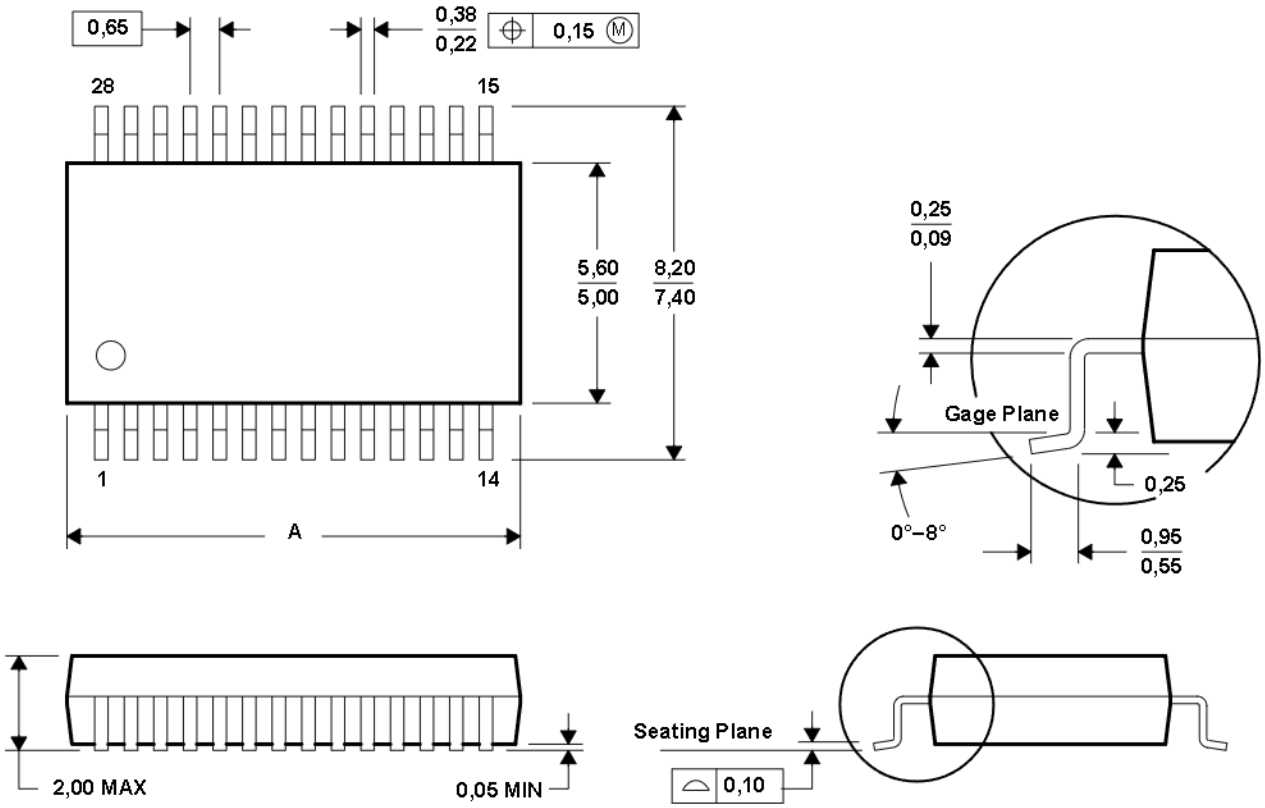


| DIM \ PINS ** | 14 | 16 | 20 | 24 | 28 | 30 | 38 |
|---|---|---|---|---|---|---|---|
| A MAX | 6,50 | 6,50 | 7,50 | 8,50 | 10,50 | 10,50 | 12,90 |
| A MIN | 5,90 | 5,90 | 6,90 | 7,90 | 9,90 | 9,90 | 12,30 |

4040065 /E 12/01

NOTES: A. All linear dimensions are in millimeters.
B. This drawing is subject to change without notice.
C. Body dimensions do not include mold flash or protrusion not to exceed 0,15.
D. Falls within JEDEC MO-150

**PW (R-PDSO-G**)** **PLASTIC SMALL-OUTLINE PACKAGE**

14 PINS SHOWN

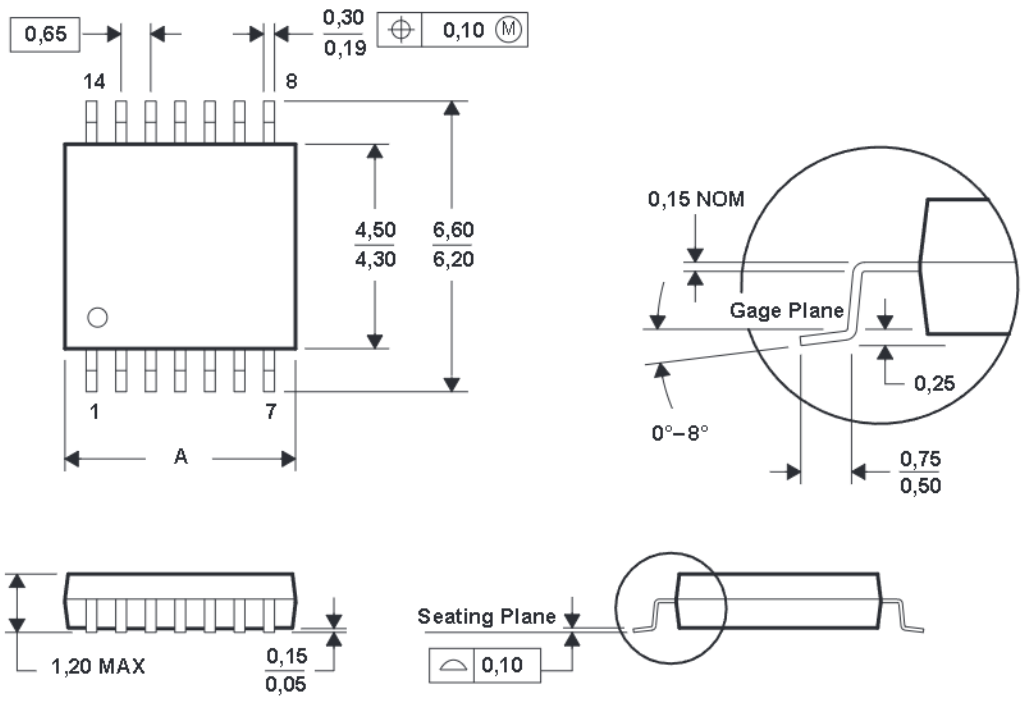


| DIM \ PINS ** | 8 | 14 | 16 | 20 | 24 | 28 |
|---|---|---|---|---|---|---|
| A MAX | 3,10 | 5,10 | 5,10 | 6,60 | 7,90 | 9,80 |
| A MIN | 2,90 | 4,90 | 4,90 | 6,40 | 7,70 | 9,60 |

4040064/F 01/97

NOTES: A. All linear dimensions are in millimeters.
B. This drawing is subject to change without notice.
C. Body dimensions do not include mold flash or protrusion not to exceed 0,15.
D. Falls within JEDEC MO-153

## IMPORTANT NOTICE

Texas Instruments Incorporated and its subsidiaries (TI) reserve the right to make corrections, modifications, enhancements, improvements, and other changes to its products and services at any time and to discontinue any product or service without notice. Customers should obtain the latest relevant information before placing orders and should verify that such information is current and complete. All products are sold subject to TI's terms and conditions of sale supplied at the time of order acknowledgment.

TI warrants performance of its hardware products to the specifications applicable at the time of sale in accordance with TI's standard warranty. Testing and other quality control techniques are used to the extent TI deems necessary to support this warranty. Except where mandated by government requirements, testing of all parameters of each product is not necessarily performed.

TI assumes no liability for applications assistance or customer product design. Customers are responsible for their products and applications using TI components. To minimize the risks associated with customer products and applications, customers should provide adequate design and operating safeguards.

TI does not warrant or represent that any license, either express or implied, is granted under any TI patent right, copyright, mask work right, or other TI intellectual property right relating to any combination, machine, or process in which TI products or services are used. Information published by TI regarding third-party products or services does not constitute a license from TI to use such products or services or a warranty or endorsement thereof. Use of such information may require a license from a third party under the patents or other intellectual property of the third party, or a license from TI under the patents or other intellectual property of TI.

Reproduction of information in TI data books or data sheets is permissible only if reproduction is without alteration and is accompanied by all associated warranties, conditions, limitations, and notices. Reproduction of this information with alteration is an unfair and deceptive business practice. TI is not responsible or liable for such altered documentation.

Resale of TI products or services with statements different from or beyond the parameters stated by TI for that product or service voids all express and any implied warranties for the associated TI product or service and is an unfair and deceptive business practice. TI is not responsible or liable for any such statements.

Following are URLs where you can obtain information on other Texas Instruments products and application solutions:

| **Products** | | **Applications** | |
|---|---|---|---|
| Amplifiers | amplifier.ti.com | Audio | www.ti.com/audio |
| Data Converters | dataconverter.ti.com | Automotive | www.ti.com/automotive |
| DSP | dsp.ti.com | Broadband | www.ti.com/broadband |
| Interface | interface.ti.com | Digital Control | www.ti.com/digitalcontrol |
| Logic | logic.ti.com | Military | www.ti.com/military |
| Power Mgmt | power.ti.com | Optical Networking | www.ti.com/opticalnetwork |
| Microcontrollers | microcontroller.ti.com | Security | www.ti.com/security |
| | | Telephony | www.ti.com/telephony |
| | | Video & Imaging | www.ti.com/video |
| | | Wireless | www.ti.com/wireless |

Mailing Address: Texas Instruments
Post Office Box 655303 Dallas, Texas 75265

Copyright © 2005, Texas Instruments Incorporated